KFC-1052

SERVICE MANUAL

KENWOOD

Q.C. COPY

©1989-3 PRINTED IN JAPAN
B51-6068-00(1)173

EXTERNAL VIEW

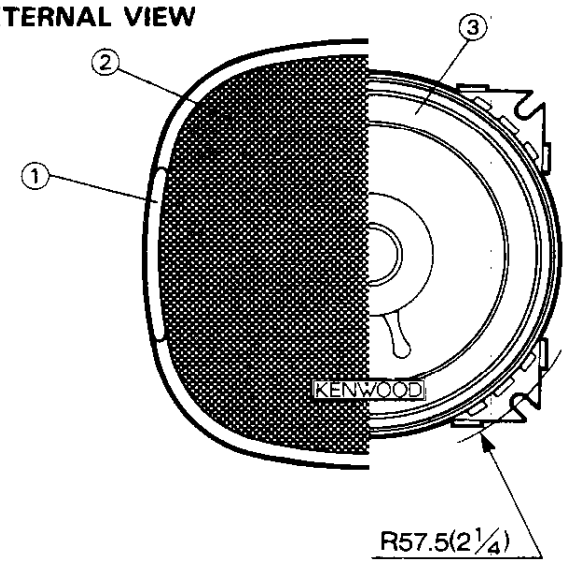

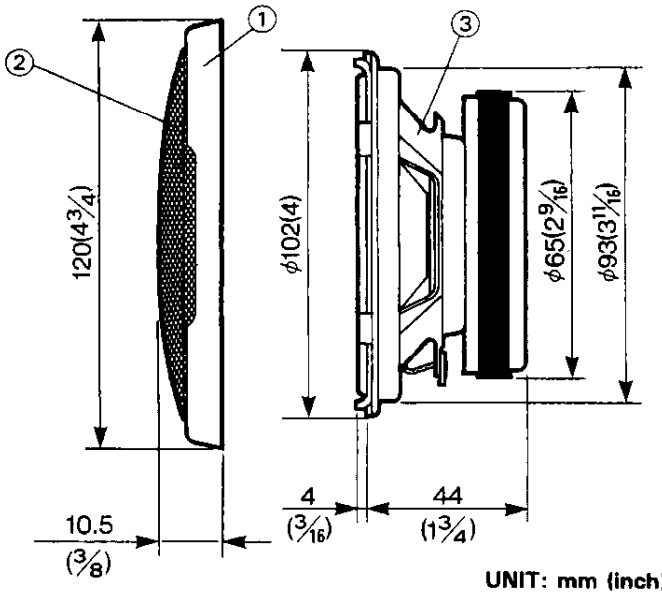

UNIT: mm (inch)

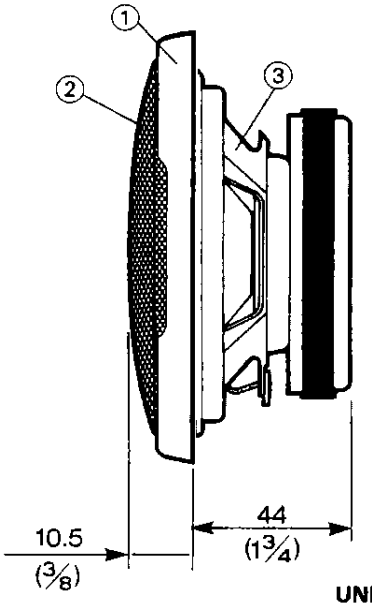

UNIT: mm (inch)

PARTS INCLUDED

3m(10ft) ····· ×2

φ4–20(3/16–13/16) ····· ×8

····· ×8

PARTS LIST

★ New parts

Parts without **Parts No.** are not supplied.

Les articles non mentionnés dans le **Parts No.** ne sont pas fournis.

Teile ohne **Parts No.** werden nicht geliefert.

Ref No.	New Parts	Parts No.	Description
①	★	B06-0331-08	FRONT GRILLE
		B46-0100-10	WARRANTY CARD
	★	E30-1238-08	CORD SET
②	★	F09-0889-08	PROTECTOR
	★	N99-1088-08	SCREW SET
③	★	T07-0152-08	SPEAKER

SPECIFICATIONS

Speaker ····· 10cm(4 in) Cone type
127g(4.5oz) magnet

Peak power ····· 40 watts

Frequency Response ····· 60Hz – 20,000Hz

Sensitivity ····· 90dB/W at 1m

Impedance ····· 4 ohms

Weight per speaker ····· 0.39kg(13.8oz)/pc.

(KENWOOD follows a policy of continuous advancements in development. For this reason specifications may be changed without notice.)

KENWOOD CORPORATION
Shionogi Shibuya Building 17-5 2-chome Shibuya Shibuya-ku Tokyo 150 Japan

KENWOOD U.S.A. CORPORATION
2201 East Dominguez Street Long Beach, CA 90810
550 Clark Drive, Mount Olive, NJ 07828, U.S.A.

KENWOOD ELECTRONICS CANADA INC.
P.O. Box 1075 959 Gana Court Mississauga, Ontario Canada L4T 4C2

KENWOOD ELECTRONICS BENELUX N.V.
Mechelsesteenweg 418 B-1930 Zaventem Belgium

KENWOOD ELECTRONICS DEUTSCHLAND GMBH
Rembrucker-Str. 15 6056 Heusenstamm West Germany

TRIO-KENWOOD FRANCE S.A.
Hi-Fi·VIDEO·CAR Hi-Fi
13 Boulevard Ney 75018 Paris France

TRIO-KENWOOD U.K. LTD.
17 Bristol Road The Metropolitan Centre Greenford Middx UB6 8UP England

KENWOOD ELECTRONICS AUSTRALIA PTY. LTD.
4E Woodcock Place Lane Cove N.S.W. 2066 Australia

KENWOOD & LEE ELECTRONICS, LTD.
Wang Kee Building 4th Floor 34-37 Connaught Road Central Hong Kong